03/10/23

BOLT TABLE FRAME LINE 4				
LOCATION	QUAN	TYPE	DIA	LENGTH
Columns/Raf	8	A325	1/2"	2"

TRIM TABLE FRAME LINE 4			
◇ID	PART	LENGTH	DETAIL
1	BSD121	121.000	TRIM_365
2	MFR121	121.000	TRIM_353
3	COB242	242.000	TRIM_353
4	JTA121	121.000	TRIM_362
5	RSA121	121.000	TRIM_399
6	RSA242	242.000	TRIM_399
7	RTR121	121.000	TRIM_399

MEMBER TABLE FRAME LINE 4		
MARK	PART	LENGTH
EB-2	W9513531	59.500
EC-1	W08SD075	230.188
G-4	08Z060	149.250
G-5	08Z060	149.250
G-6	08Z060	141.500

CONNECTION PLATES FRAME LINE 4	
□ID	MARK/PART
1	CSR41
2	GCC12&bt

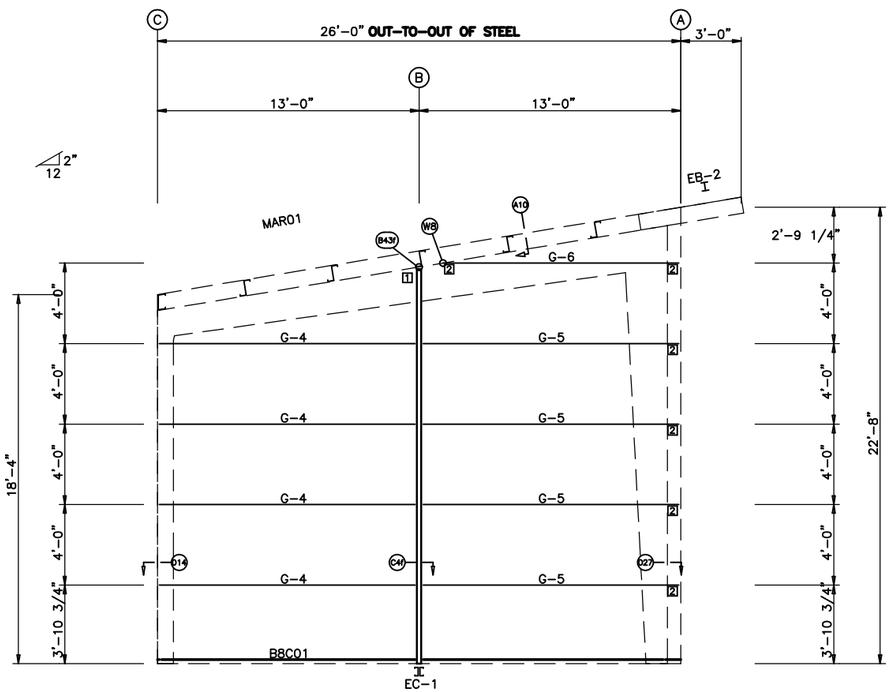

ENDWALL FRAMING: FRAME LINE 4

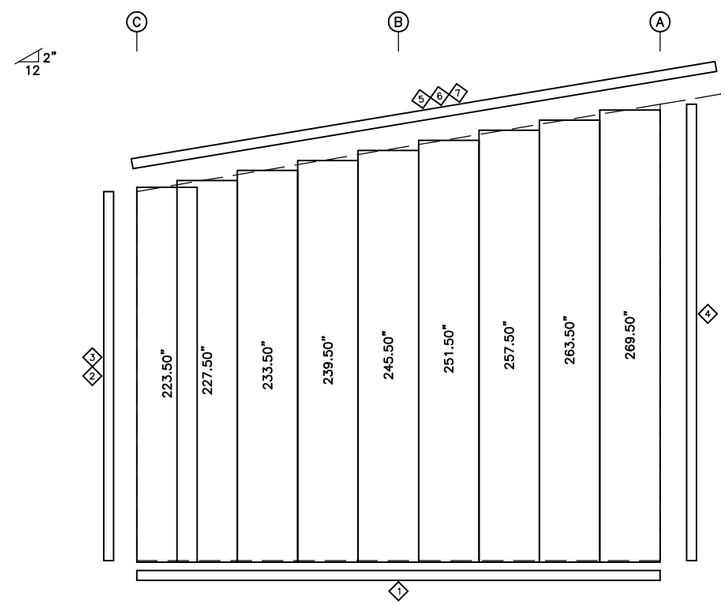

ENDWALL SHEETING & TRIM: FRAME LINE 4

PANELS: 26 Ga. RPW – Pearl Gray PVDF

ENDWALL FRAMING PLAN

GENERAL NOTES

1. STD. ROD/CABLE SIZES PER PART PREFIX ARE:

ROD		CABLE	
RD05–	= 5/8" ROD	CA02–	= 1/4" CABLE
RD06–	= 3/4" ROD	CA03–	= 3/8" CABLE
RD07–	= 7/8" ROD	CA04–	= 1/2" CABLE
RD08–	= 1" ROD		
RD09–	= 1 1/8" ROD		
RD10–	= 1 1/4" ROD		

2. ROD/CABLE BRACING THAT OCCURS IN FLUSH OR INSET GIRT CONDITIONS WILL REQUIRE FIELD SLOTTING OF GIRT WEBS TO ALLOW FOR BRACING.

3. FRAMED OPENINGS WHICH ARE FIELD LOCATED WILL REQUIRE FIELD CUTTING OF GIRTS AND SHEETING.

4. THIS DRAWING IS NOT TO SCALE.

ISSUE	DWN	CHK	ENG	PE	DATE
Anchor Bolts for Construction	MBS	CDC	RHW		01/25/2023
Building Department Review	MBS	CDC	RHW		01/26/2023

AMERICAN BUILDINGS a NUCOR brand
2260 TENAYA DRIVE
MODESTO, CA 95354
PHONE: (209) 236-0580
FAX: (209) 236-0588

PROJECT NAME
WILCO HAY STORAGE - EUGENE
EUGENE, OR 97402

CUSTOMER NAME
WALEN CONSTRUCTION, LLC
TUALATIN, OR 97062

JOB NUMBER
N23G0014A

SHEET TITLE
ENDWALL FRAMING AND SHEETING

REGISTERED PROFESSIONAL ENGINEER
97085PE
OREGON
MAR. 9 2023
WING HONG LO

EXPIRATION DATE: 12-31-2024

This seal pertains only to the materials designed and supplied by the Metal Building Manufacturer. The drawings and the metal buildings which they represent are the product of the Metal Building Manufacturer. The registered professional engineer whose seal appears on these drawings is employed by the Metal Building Manufacturer and does not serve as or represent the project engineer of record and shall not be construed as such.

Reviewed for Code Compliance - 08/18/2023 3:34:37 PM
Permit Number - 23-01679-01
Received by City of Eugene: 16 - 7 - 50 ~~03/06/2023, 5:02:29 PM~~