BASIC INSTALLATION SEQUENCE

THE FOLLOWING STEPS OUTLINE THE BASIC INSTALLATION OF THE ROOF SYSTEM. REFERENCE THE SPECIFIC DETAILS WITHIN THIS ERECTION DRAWING SET FOR CONDITIONS SPECIFIC TO THIS PROJECT.

START PANEL PREPARATION
THE ROOF SYSTEM IS DESIGNED TO BE ELEVATED AND FLOAT ABOVE THE ROOF SUPPORT MEMBERS. BEGIN AT THE LOWER RAKE CORNER BY INSTALLING THE EAVE PLATE. (REFERENCE EAVE PLATE INSTALLATION BELOW)

AFTER EAVE PLATE HAS BEEN INSTALLED, STITCH THE FIRST ROLL OF ROOF INSULATION FROM RIDGE / HIGH EAVE TO LOW EAVE.

INSTALL THE RAKE CLIPS AND RAKE ANGLE TO SUPPORT / SECURE THE START PANEL. (REFERENCE RAKE ANGLE / RAKE CLIP PREPARATION TO THE RIGHT)

FIELD CUT AND INSTALL START PANEL
THE START PANEL IS SUPPLIED AS A FULL SHEET AND WILL NEED TO BE CUT. REFER TO THE ROOF SHEETING PLAN FOR START / FINISH DIMENSIONS AND RAKE DETAILS TO DETERMINE PROPER PANEL CUT. INSTALL THE START PANEL (LOW EAVE PANEL FIRST IF PANEL RUN IS LONG ENOUGH TO REQUIRE ENDLAPS) BY SECURING THE PANEL TO THE EAVE PLATE AND RAKE ANGLE. (REFERENCE LOW EAVE AND RAKE DETAILS). INSTALL PANEL CLIPS ON LEADING EDGE OF PANEL AS SHOWN IN THE PANEL CLIP DETAIL. CONTINUE TO INSTALL UPSLOPE START PANEL IF ENDLAPS ARE REQUIRED. REFERENCE THE BACKUP PLATE DETAIL AND ENDLAP DETAIL FOR ATTACHMENT OF START PANEL(S) AT RAKE ANGLE.

INTERMEDIATE PANEL & MODULARITY
THE INTERMEDIATE PANELS (FULL PANELS) SHOULD BE INSTALLED BY ROLLING THE PANEL INTO PLACE ENSURING THE SEAM IS FULLY ENGAGED. SECURE THE PANELS WITH PANEL CLIPS AND THE LOW EAVE ACROSS THE ROOF. IT IS RECOMMENDED TO INSTALL THE OUTSIDE CLOSURE AT THE HIGH EAVE / RIDGE AS THE ROOF PROGRESSES. THIS WILL HELP MAINTAIN MODULARITY. (REFERENCE HIGH EAVE / RIDGE DETAILS)

FINISH PANEL
THE FINISH PANEL IS SIMILAR TO THE START PANEL INSTALLATION. THE RAKE ANGLE CLIPS AND RAKE ANGLE NEEDS TO BE INSTALLED ON TOP OF THE INSULATION PRIOR TO INSTALLING THE FINISH PANEL. THE FINISH PANEL SHOULD BE FIELD CUT AND ROLLED INTO PLACE AND SECURED TO THE RAKE ANGLE SIMILAR TO THE START PANEL.

TRIM INSTALLATION
TRIM INSTALLATION CAN BE DONE AFTER THE ROOF PANELS ALL HAVE BEEN INSTALLED OR CAN BE INSTALLED AS ENOUGH PANELS HAVE BEEN INSTALLED FOR ATTACHMENT OF TRIMS. (REFERENCE TRIM DETAILS)

EAVE PLATE INSTALLATION

PLACE TAPE MASTIC ON TOP OF EAVE MEMBER PRIOR TO INSTALLING EAVE PLATE. INSTALL EAVE PLATE BY FASTENING EVERY HOLE TO EAVE MEMBER (6" O.C.) PRIOR TO INSULATION BEING INSTALLED. SECURE INSULATION WITH FASTENER & INSULATION RETAINER WASHER. NOTE: IF NO ROOF INSULATION IS USED SECURE EAVE PLATE IN EVERY HOLE (6" O.C.)

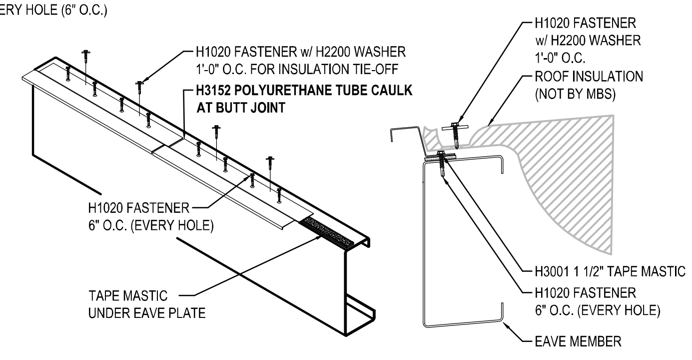

NOTE: H1020/H1070 (PURLIN/JOIST) FASTENER w/ H2200 WASHER 1'-0" O.C. FOR INSULATION TIE-OFF PROVIDED AT HIGH SIDE / RIDGE

SHORT EAVE PLATE		TALL EAVE PLATE		SUPER TALL EAVE PLATE	
EPS108	BASIC EAVE / GUTTER	EPT108	BASIC EAVE / GUTTER	EPX108	BASIC EAVE / GUTTER

PANEL CLIP INSTALLATION

BEFORE INSTALLING THE PANEL CLIP, FEEL FOR THE SUPPORT MEMBER BELOW THE INSULATION. ALIGN CLIP CENTERED OVER THE SUPPORT MEMBER AND ROLL CLIP OVER THE MALE HOOK OF THE PANEL. FASTEN CLIP WITH FASTENERS AS SPECIFIED IN THE DETAILS BASED ON THE SUPPORT MEMBER AND INSULATION UTILIZED FOR THE ROOF SYSTEM.

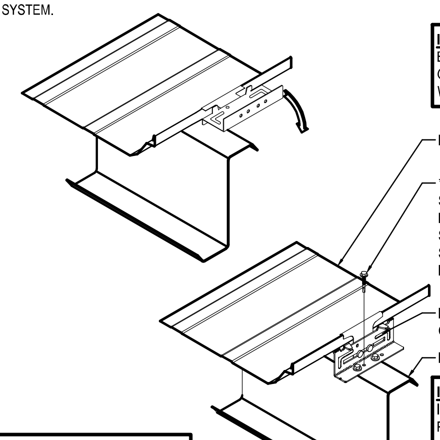

IMPORTANT NOTE:
BE CAREFUL NOT TO SCRAPE OFF THE CLIP'S SEALANT WHEN INSTALLING THE CLIP.

IMPORTANT NOTE:
IF JOIST TOP CHORD GAP EXCEEDS PANEL CLIP FASTENER LOCATIONS, ALTERNATE PANEL CLIPS TO OPPOSING CHORD ANGLES TO PREVENT LOADING JOIST TO ONE SIDE.

THERMAL BLOCKS AND INSULATION NOT SHOWN FOR CLARITY

CLIP FASTENER SELECTION

R-Boost™ APPLICATION
SEE DETAIL FA2010

PURLIN APPLICATION
H1020 FOR INSULATION ≤R-19 (6 3/8")
H1025 FOR INSULATION >R-19 (6 3/8") AND ≤R-38 (12")

JOIST APPLICATION
H1070 FOR INSULATION ≤R-19 (6 3/8")
H1075 FOR INSULATION >R-19 (6 3/8") AND ≤R-38 (12")

STANDARD CLIPS		PERIMETER CLIPS	
PART #	PART DESCRIPTION	PART #	PART DESCRIPTION
S3PC-1	SHORT CLIP	S3PC-1P	12" SHORT CLIP
S3PC-1R	SHORT CLIP - REINFORCED	S3PC-2TP	12" TALL CLIP
S3PC-2T	TALL CLIP		
S3PC-2TR	TALL CLIP - REINFORCED		
S3PC-5T	SUPER TALL CLIP		

RAKE ANGLE / RAKE CLIP PREPARATION

PRIOR TO INSTALLING THE ROOF INSULATION THE SECONDARY MEMBER WILL NEED TO BE PRE-DRILLED FOR THE RAKE CLIPS. PRE-DRILLING WILL MAKE INSTALLATION OF THE RAKE AND CLIPS MUCH EASIER AFTER INSULATION IS IN PLACE. DO NOT INSTALL RAKE CLIPS UNTIL INSULATION (IF REQUIRED) IS INSTALLED. **RAKE CLIP IS INSTALLED ON TOP OF THE INSULATION.**

SNAP A CHALK LINE AS SHOWN BELOW FROM HIGH EAVE / RIDGE TO LOW EAVE. DRILL 3/16" Ø HOLE CENTERED ON SECONDARY MEMBER. THIS HELPS TO ALIGN THE START PANEL.

NOTE: IMP WALL PANEL >4" THICK REQUIRE ANGLES ON TOP OF SECONDARY MEMBER EXTENDED BEYOND STEEL LINE TO ALLOW FOR RAKE CLIP ATTACHMENT. ATTACH WITH (1) H1020 / H1070 TO PURLIN / JOIST PRIOR TO RAKE CLIP INSTALLATION.

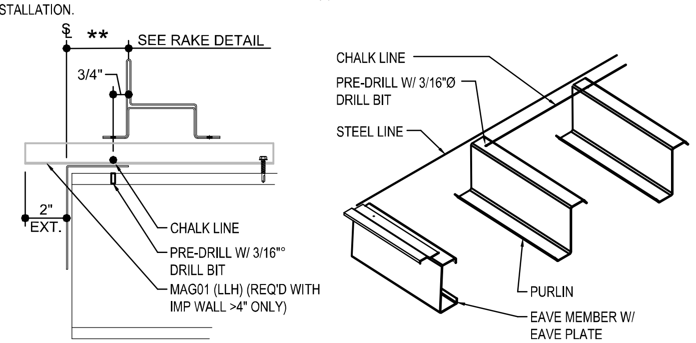

RAKE ANGLE / RAKE CLIP INSTALLATION

AFTER INSULATION IS IN PLACE AND PRIOR TO INSTALLING THE RAKE CLIPS AND RAKE ANGLE APPLY 1 1/2" TAPE MASTIC ON TOP OF THE EAVE PLATE BUT ONLY REMOVE PAPER BACKING WHERE THE RAKE ANGLE WILL REST. THIS WILL SEAL BETWEEN THE EAVE PLATE AND THE RAKE ANGLE.

SLIDE RAKE CLIPS ONTO RAKE ANGLE PRIOR TO SECURING THE RAKE CLIPS TO THE SECONDARY MEMBERS. PLACE THE RAKE CLIPS AND ANGLE OVER THE INSULATION USING A SMALL DRIFT PIN TO LOCATE THE PRE-DRILLED HOLE. INSTALL FASTENER THROUGH OPPOSITE CLIP HOLE INTO SECONDARY MEMBER. REMOVE DRIFT PIN AND INSTALL SECOND FASTENER TO SECURE CLIP. NOTE: (2) SCREWS ARE REQUIRED IN EVERY CLIP. DO NOT CUT INSULATION OUT FROM AROUND THE CLIP.

PLACE ADDITIONAL PIECE OF 1 1/2" TAPE MASTIC ON TOP OF RAKE ANGLE AND MARRY INTO EAVE PLATE MASTIC. NEXT RUN 3/4" TAPE MASTIC ALONG BEND OF RAKE ANGLE.

RAKE ANGLE TO EXTEND TO END OF PANEL AT HIGH EAVE OR RIDGE CONDITON.

EXTEND RAKE ANGLE PAST NOSE OF EAVE PLATE:	
-GUTTER	5 1/4"
-BASIC EAVE	5 1/4"

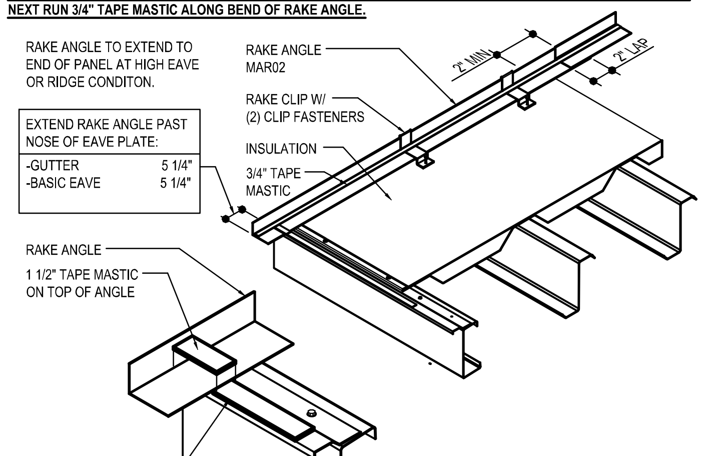

RAKE CLIP	
H2041	SHORT CLIPS
H2051	TALL CLIPS
H2061	SUPER TALL CLIPS

PANEL INSTALLATION

THE PANEL IS DESIGNED TO INTERLOCK AND HOOK TOGETHER AT THE SEAM. IN ORDER TO HOOK THE PANEL, LAY PANEL WITH FEMALE RIB OVER TOP OF THE MALE RIB. TILT THE LEADING PANEL UP UNTIL THE HOOK CATCHES THE LIP OF THE MALE RIB. ROTATE THE PANEL DOWN WHILE ENSURING THE PANEL HOOKS ENGAGED COMPLETELY UP THE RIB OF THE PANEL.

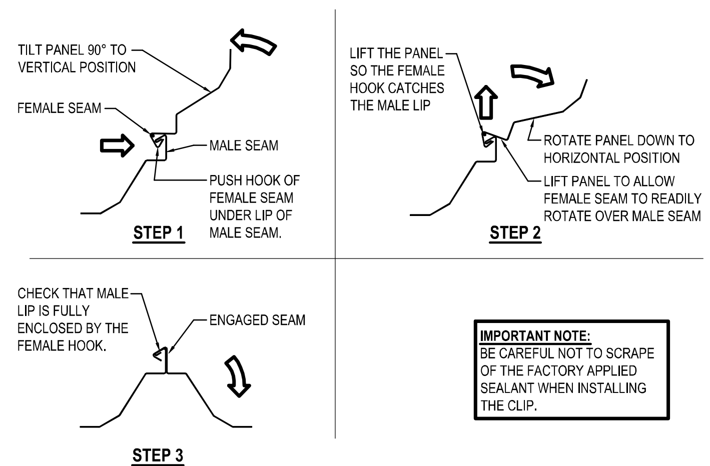

IMPORTANT NOTE:
BE CAREFUL NOT TO SCRAPE OF THE FACTORY APPLIED SEALANT WHEN INSTALLING THE CLIP.

BACKUP PLATE INSTALLATION

THE BACKUP PLATE PROVIDES SUPPORT AT THE ENDLAP AND HIGH SIDE OF THE PANEL TO ALLOW FOR COMPRESSION OF SEALANTS. THE BACK UP PLATE HAS NOTCHES THAT SLIDE ONTO THE PANEL TO LOCATE AND HOLD THE BACKUP PLATE IN PLACE. AT THE RAKE CONDITION, THE BACKUP PLATE IS TO BE FIELD CUT FLUSH WITH THE HORIZONTAL LEG OF THE RAKE ANGLE. DO NOT EXTEND BACKUP PLATE ON TOP OF RAKE ANGLE.

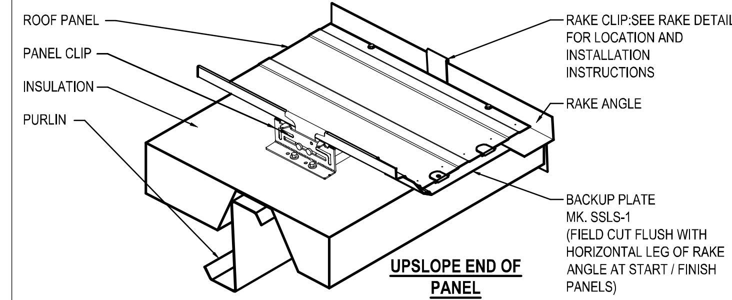

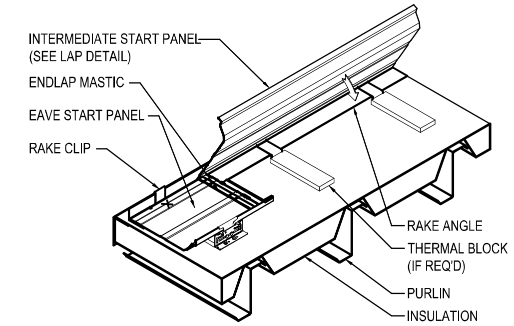

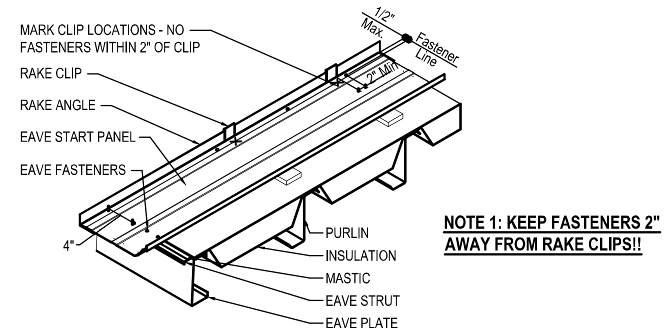

NOTE 1: KEEP FASTENERS 2" AWAY FROM RAKE CLIPS!!

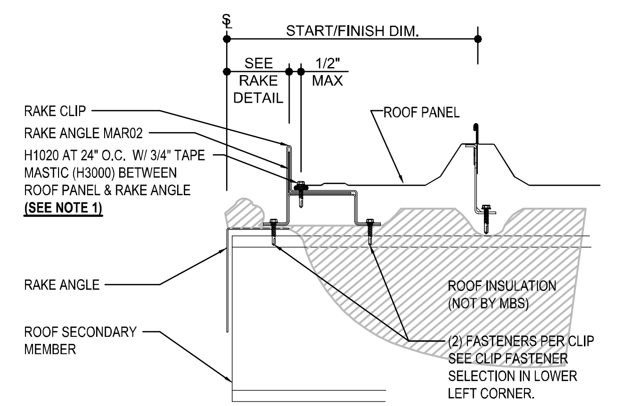

PANEL HIGH EAVE PREPARATION

BEFORE INSTALLING ADJOINING PANELS, **APPLY 3" OF BUTYL CAULK ON THE MALE RIB** FROM THE PANEL NOTCH DOWNSLOPE AS SHOWN TO SEAL PANEL SEAM. THE **FEMALE RIB WILL NEED TO BE FIELD NOTCHED** TO MATCH THE MALE RIB TO ALLOW THE OUTSIDE CLOSURE TO FIT PROPERLY. IT IS RECOMMENDED FOR THE NOTCH TO BE DONE BEFORE THE PANEL IS ROLLED INTO PLACE FOR EASE BUT CAN BE DONE AFTER. AFTER THE PANEL IS ROLLED INTO PLACE AND FIELD NOTCHED SLIDE THE BACKUP PLATE ONTO THE PANEL.

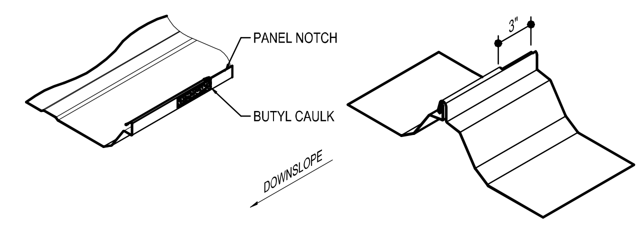

OUTSIDE CLOSURE MASTIC INSTALLATION

START & FINISH PANEL NOTE: OUTSIDE CLOSURE CANNOT BE INSTALLED IN THE START / FINISH PANEL UNTIL THE RAKE TRIM IS INSTALLED.

MODULARITY NOTE: OUTSIDE CLOSURE MUST BE INSTALLED AS ROOF PROGESSES. AS NEXT PANEL IS INSTALLED, CLOSURE MUST BE INSTALLED IN THE PREVIOUS PANEL RUN.

STEP 1: APPLY THE PRECUT MASTIC ACROSS THE PANEL WITH THE BOTTOM OF THE MASTIC IN LINE WITH THE NOTCH. PRESS THE MASTIC INTO THE CORNERS OF THE TRAPEZOID TO ENSURE THERE ARE NO GAPS. CUT A 3" PIECE OF THE PRECUT MASTIC TO PLACE A PIGTAIL AROUND THE PANEL RIB WHERE THE NOTCH IS LOCATED. FOLD PIG TAIL AS SHOWN AND PRESS INTO VOID UNDER SEAM. MARRY PIGTAIL TO PRECUT AND SEAL END OF PANEL SEAM.

STEP 2: ALIGN THE OUTSIDE CLOSURE WITH THE NOTCH AND SEAT INTO THE PRECUT MASTIC. ATTACH THE OUTSIDE CLOSURE THROUGH THE PREPUNCHED HOLES THROUGH THE PANEL AND INTO THE BACKUP PLATE.

STEP 3: INSTALL FASTENER THROUGH RIB INTO ADJACENT OUTSIDE CLOSURE TO DRAW THEM TOGETHER.

STEP 4: PRIOR TO INSTALLING TRIM, APPLY BUTYL CAULK DOWN PROFILE OF TRAPEZOID AND 1" MIN ONTO PANEL FLAT. ALSO APPLY BUTYL CAULK FULL LENGTH OF NOTCH AND ACROSS JOINT OF ADJACENT OUTSIDE CLOSURES. ROLL OUT TAPE MASTIC ACROSS TOP OF OUTSIDE CLOSURES FOR TRIM SEALANT.

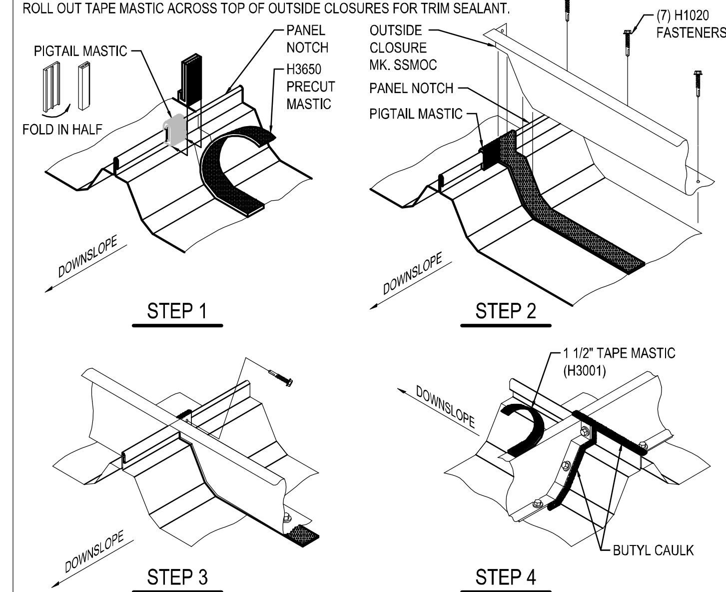

OUTSIDE CLOSURE AT START / FINSH PANEL: CUT CLOSURE TO LENGTH LEAVING AN EXTRA 1 1/2" TO FORM A TAB THAT WILL SEAL TO BACK OF RAKE TRIM. PRE-DRILL THIS TAB TO ACCEPT FASTENER.

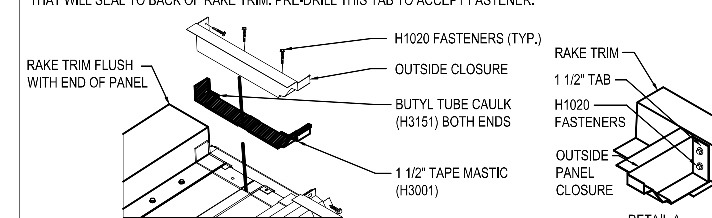

VOID CLOSURE INSTALLATION

IT IS CRITICAL TO ENSURE THAT THE TAPE MASTIC OVER THE CLOSURE DOES NOT LEAVE GAPS AT THE CORNERS AND THAT THE BUTYL CAULK IN PANEL RIB JOINS THE TAPE MASTIC OVER THE CLOSURE.

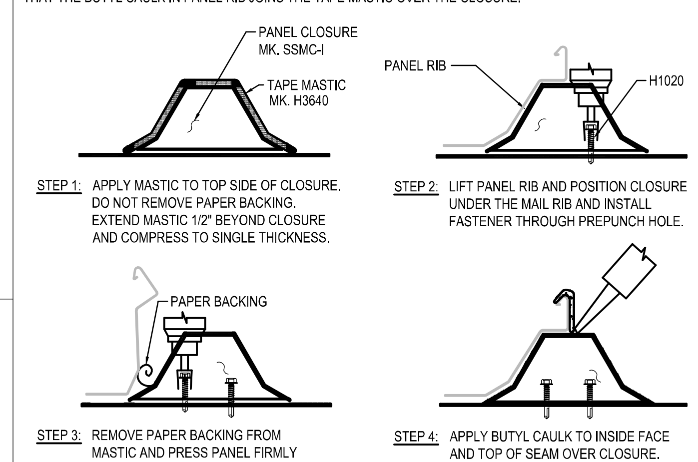

STEP 1: APPLY MASTIC TO TOP SIDE OF CLOSURE. DO NOT REMOVE PAPER BACKING. EXTEND MASTIC 1/2" BEYOND CLOSURE AND COMPRESS TO SINGLE THICKNESS.

STEP 2: LIFT PANEL RIB AND POSITION CLOSURE UNDER THE MAIL RIB AND INSTALL FASTENER THROUGH PREPUNCH HOLE.

STEP 3: REMOVE PAPER BACKING FROM MASTIC AND PRESS PANEL FIRMLY INTO PLACE.

STEP 4: APPLY BUTYL CAULK TO INSIDE FACE AND TOP OF SEAM OVER CLOSURE.

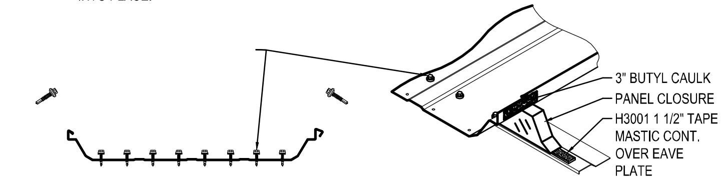

SS360 BASIC INSTALLATION DETAIL

BASIC PANEL INSTALLATION INSTRUCTIONS
SEE ROOFLINE TRIM DETAILS FOR FURTHER INFORMATION

03/10/23

ISSUE	DWN	CHK	ENG	PE	DATE
Anchor Bolts for Construction	MBS	CDC	RHW		01/25/2023
Building Department Review	MBS	CDC	RHW		01/26/2023

AMERICAN BUILDINGS
a NUCOR brand
2260 TENAYA DRIVE
MODESTO, CA 95354
PHONE: (209) 236-0580
FAX: (209) 236-0588

PROJECT NAME
WILCO HAY STORAGE - EUGENE
EUGENE, OR 97402

CUSTOMER NAME
WALEN CONSTRUCTION, LLC
TUALATIN, OR 97062

JOB NUMBER
N23G0014A

SHEET TITLE

SHEET
D6 of 10

REGISTERED PROFESSIONAL ENGINEER
97085PE
01/31/2023
OREGON
MAR. 9 2021
WING HONG LO
EXPIRATION DATE: 12-31-2024

This seal pertains only to the materials designed and supplied by the Metal Building Manufacturer. The drawings and the metal buildings which they represent are the product of the Metal Building Manufacturer. The registered professional engineer whose seal appears on these drawings is employed by the Metal Building Manufacturer and does not serve as or represent the project engineer of record and shall not be construed as such.

Reviewed for Code Compliance - 08/18/2023 3:34:14 PM
Permit Number - 23-01679-01

Received by City of Eugene: 16_7_D6 ... 03/16/2023, 5:03:30 PM

Eugene